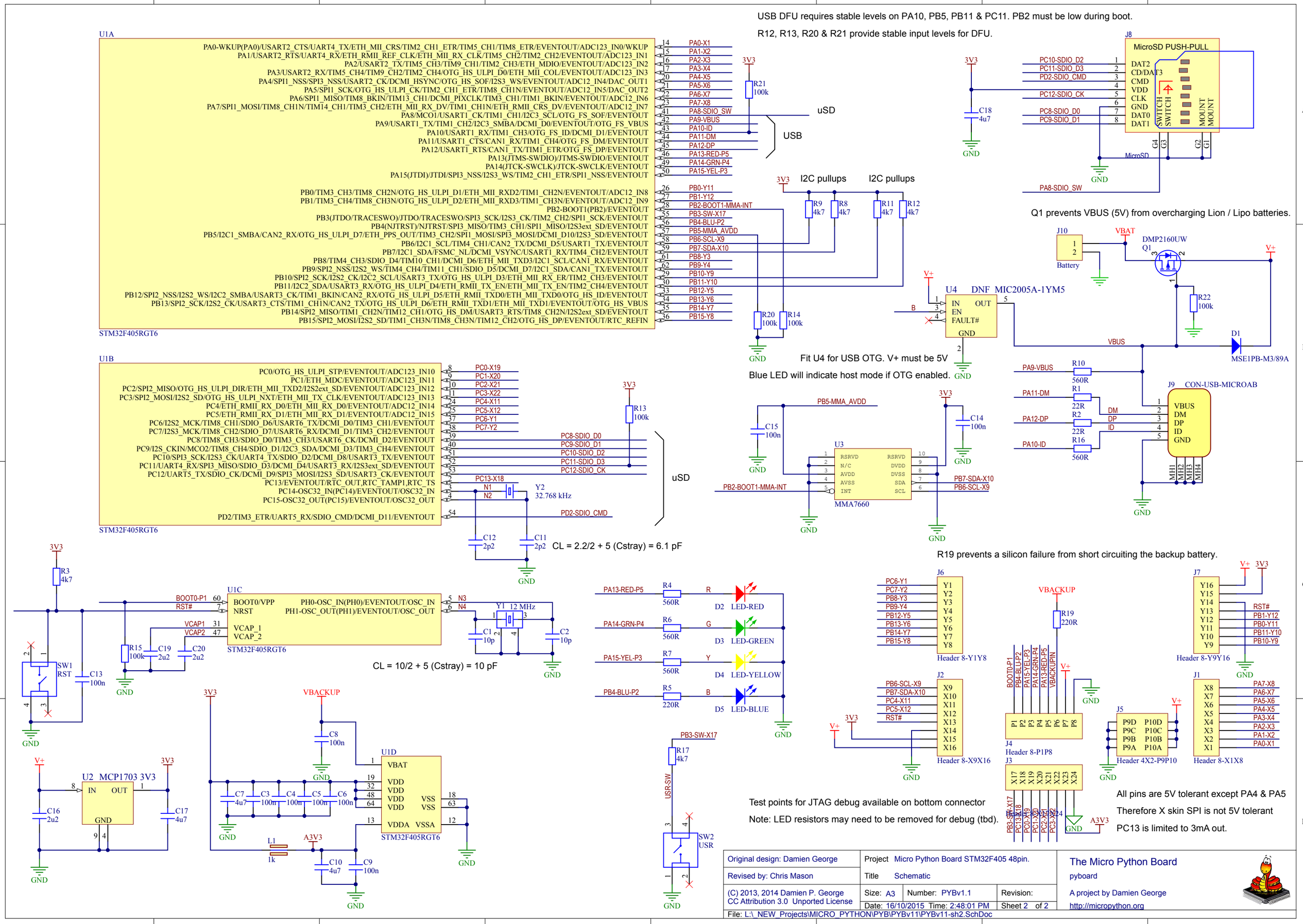
USB DFU requires stable levels on PA10, PB5, PB11 & PC11. PB2 must be low during boot.
R12, R13, R20 & R21 provide stable input levels for DFU.
U1A
STM32F405RGT6
uSD
USB
I2C pullups
I2C pullups
J8
MicroSD PUSH-PULL
Q1 prevents VBUS (5V) from overcharging Lion / Lipo batteries.
J10
Battery
DMP2160UW
Q1
U4 DNF MIC2005A-1YM5
Fit U4 for USB OTG. V+ must be 5V
Blue LED will indicate host mode if OTG enabled.
D1
MSE1PB-M3/89A
J9 CON-USB-MICROAB
U1B
STM32F405RGT6
uSD
Y2
32.768 kHz
CL = 2.2/2 + 5 (Cstray) = 6.1 pF
U3
MMA7660
R19 prevents a silicon failure from short circuiting the backup battery.
U1C
STM32F405RGT6
Y1 12 MHz
CL = 10/2 + 5 (Cstray) = 10 pF
D2 LED-RED
D3 LED-GREEN
D4 LED-YELLOW
D5 LED-BLUE
Header 8-Y1Y8
Header 8-Y9Y16
Header 8-X9X16
Header 8-P1P8
Header 4X2-P9P10
Header 8-X1X8
U2 MCP1703 3V3
U1D
STM32F405RGT6
SW1
RST
SW2
USR
Test points for JTAG debug available on bottom connector
Note: LED resistors may need to be removed for debug (tbd).
All pins are 5V tolerant except PA4 & PA5
Therefore X skin SPI is not 5V tolerant
PC13 is limited to 3mA out.
Original design: Damien George
Revised by: Chris Mason
(C) 2013, 2014 Damien P. George
CC Attribution 3.0 Unported License
Project Micro Python Board STM32F405 48pin.
Title Schematic
Size: A3
Number: PYBv1.1
Revision:
Date: 16/10/2015 Time: 2:48:01 PM
Sheet 2 of 2
File: L:_NEW_Projects\MICRO_PYTHON\PYB\PYBv11\PYBv11-sh2.SchDoc
The Micro Python Board
pyboard
A project by Damien George
http://micropython.org